Defender™ internal and suspended walkways and attic ladders

Defender walkways are always ready, providing safe, swift and easy access to higher levels and plant equipment for personnel without any specialised height safety training.

Designed and tested in a ***NATA™-accredited*** fall prevention laboratory, Defender walkways and ladders fully comply with the ***Australian National Construction Code*** (formerly the BCA), ***AS 1657*** requirements, ***OHS legislation*** and ***state regulations***.

Defender™... independently certified safety

Accredited with ***StandardsMark™*** and ***CodeMark™*** quality certification, Defender access and safety equipment provides superior strength and reliability – every time.

And because a walkway is only as good as its configuration and installation, Defender internal and suspended walkways and ladder systems are tailor-made to suit your site and installed only by Certified Defender Installers.

About the AS 1657 Standard

The AS 1657 Standard requires that the means of access shall be selected from the following limits of slope, and considered in the hierarchical order given:

Limits of slope

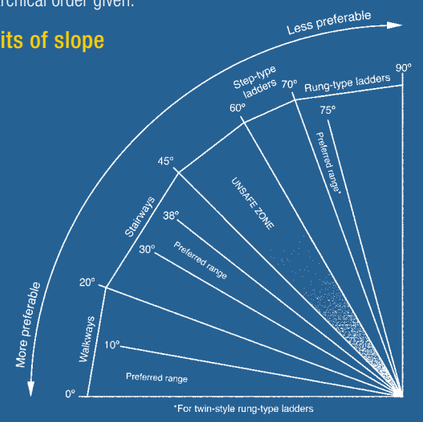

Defender's wide range of equipment includes all the means of access discussed in AS 1657, in addition to all components (stabilizing brackets, safety-lines, guardrails, hand-rails, cages, intermediate platforms/landings & platforms, lockable gates, access hatches, etc.), for a complete and safe height access system.

Other Specifications Guides in the DEFENDER series:

- Access Hatches
- Cooling Tower Platforms
- Guardrails
- Landings & Platforms
- Roof Anchors
- Rung Ladders
- Staircases
- Static Lines & Rail Systems
- Step Type Ladders
- Walkways

AS 1657 Approved

AS 1657 is the Australian Standard for the design, construction and installation of guardrails, fixed platforms, walkways, staircases and ladders. This standard underpins Defender's performance.

ISO 9001 Quality

ISO 9001 is the world's most established quality framework, currently used by over 750,000 organisations in 161 countries. This standard assures Defender's quality.

CodeMark™ – National Construction Code Approved

The CodeMark scheme recognises Defender's compliance with the National Construction Code (formerly the BCA).

Get it done right, first time, for less. Defender equipment and installation is extraordinarily cost-effective. Why? Because smart design shouldn't cost extra.

CALL US TODAY ON 1300 013 794 TO ARRANGE A VISIT FROM A CERTIFIED DEFENDER™ CONSULTANT

DEFENDER™

Independently certified safety

To order, receive a quote, or for more information contact us today at:

enquiries@workplacedefender.com.au
or call **1300 013 794**

www.workplacedefender.com.au

Internal & Suspended Walkways and Attic Ladders

SPECIFICATIONS GUIDE

DEFENDER™

Independently certified safety

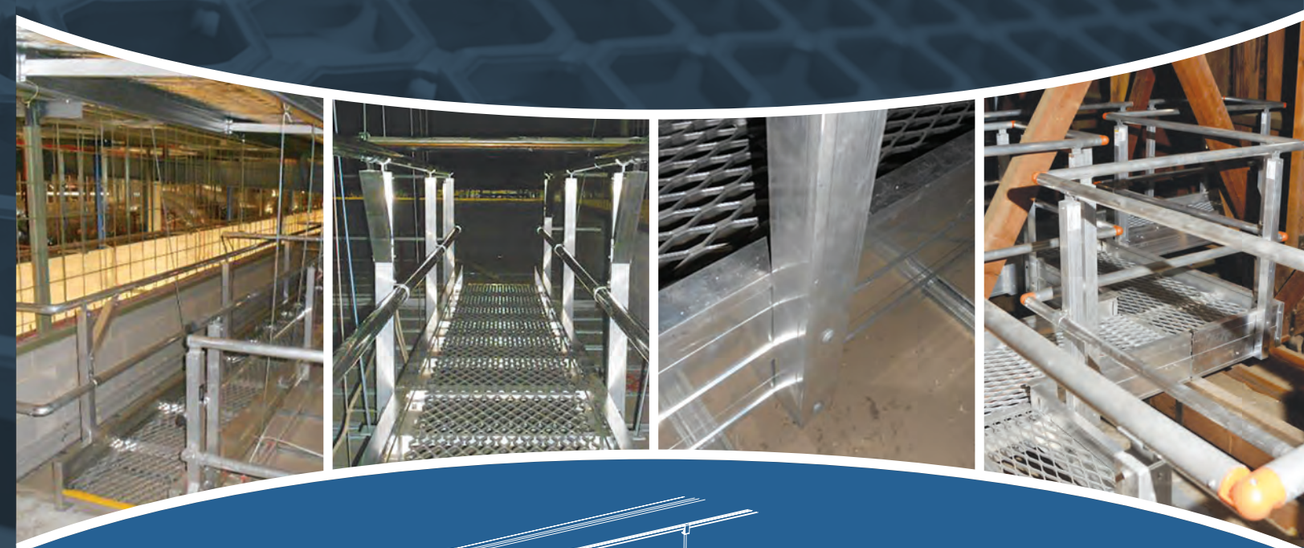

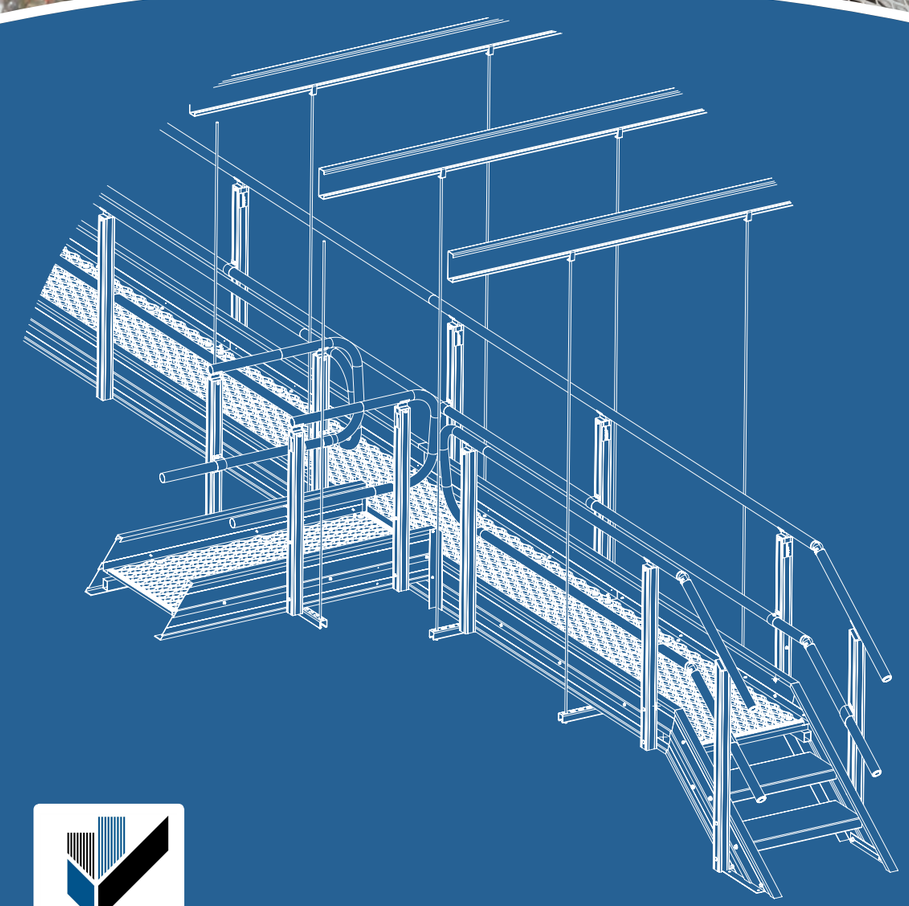

AS 1657 Approved

CODEMARK Australia CM70045

www.workplacedefender.com.au

Defender™ internal & suspended walkways

Manufacture and installation specifications:

> Internal walkways mounted on roof beams/other site structure to be installed with guardrails to facilitate safe traversing across area. (See Figure 2.)

> Internally suspension of walkways shall be from roof purlins, via threaded steel rods installed at regular intervals. (See Figure 3.)

> The clear width of the walkway shall be at least 600mm.

> Any gap between adjacent made-up sections of grated floors shall not exceed 10mm.

> A toe board shall be provided at the edge of a walkway where an object could fall more than 2000mm.

> Walkways shall be designed for the dead load of the designed structure plus a minimum superimposed live loading of 2.5kPa uniformly distributed.

Independent certification to Australian Standards

> Walkway system shall be independently certified to AS 1657 by a member of the Association of Accredited Certification Bodies (*SAI Global™* or equivalent).

Certified Product™
AS 1657 Approved
SMK40193

> ISO 9001 design certification to ensure consistent delivery of walkway systems that meet OHS requirements and minimise the incidence of roof leaks.

Certified System™
Quality ISO 9001
QMS43335

Trip hazards controlled at terminations and joins - installation with end bar and joiner bar

> Joiner cap to be fitted where any walkway module adjoins another walkway section.

> End cap to be fitted where walkway terminates.

Every Defender system is individually configured to suit your site and the way your people work.

Internal catwalks on incline

> When traversing inclines ranging from 7 to 20 degrees, walkways are to be levelled over the flat roof surface. Provide guardrails on both sides for effective fall prevention.

> When ascending the areas with gradients ranging from 7 to 20 degrees, install cleats to the walkway at intervals prescribed in AS 1657 to allow pedestrians to walk up the incline without slipping.

> Where guardrails are provided on both sides of a walkway, the clear width of the walkway measured between the innermost guardrails shall not be less than 550mm. (See Figure 4.)

Slip resistance tested in a NATA™-accredited lab

> Tested and certified to meet AS/NZS 4568 by wet pendulum test to minimum R10 by *NATA™-accredited* laboratory.

Corrosion resistance

> Manufactured from non-corrosive Grade 6063 aluminium and hot-dipped galvanised components.

Demonstrably competent installers

> Height safety installers to demonstrate competency through training delivered by a registered training organisation.

> Independent certification to show the walkway system meets the requirements of the National Construction Code (formerly the BCA) by the *CodeMark™* Building Certification Scheme or an independent registered building certifier.

CODEMARK Australia
CM70045

> Installation performed by organization independently certified to AS/NZS 4801 Standard for Health and Safety Management Systems.

Certified System™
Health & Safety AS/NZS 4801

Environmental accreditation

> Manufacture and construction to be conducted by an organisation independently certified to satisfy the ISO 14001 Environmental Management System, recognising the management of primary environmental issues.

Certified System™
Environment ISO 14001
EMS41358

Installation

> Height safety installers demonstrate competency through training delivered by a registered training organisation.

> Independently accredited installation contractor to install the walkway system.

Traceability

> Mark all walkways to provide full traceability to material batches.

Labelling

> Mark each walkway individually with a unique ID number specifying the manufacturer, installer, certifier and next inspection due date on a clear label. (See Figure 1.)

Figure 1.

Defender™ attic ladders

> Retractable attic ladder to be installed (where applicable) for easy and safe access to attics and roof interiors.

> Ladder to be installed with complete ceiling access hatch fittings. (See Figure 5.)

> Ladder to be installed with sufficient clearance for extension of ladder at 75 degree angle, ensuring full compliance to AS 1657.

Figure 2.

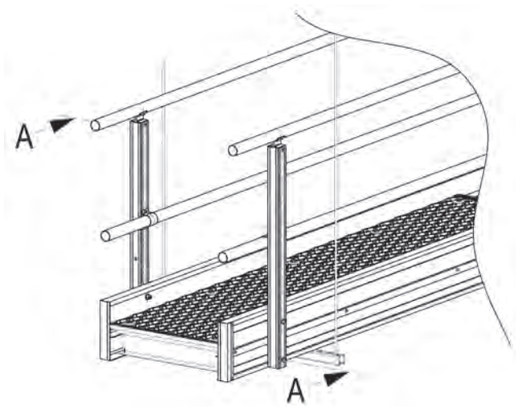

Figure 3.

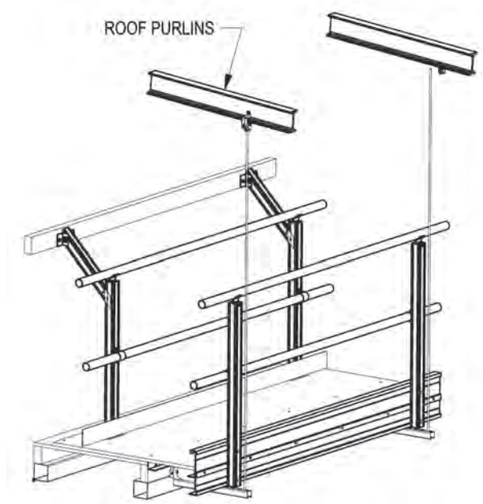

Figure 4.

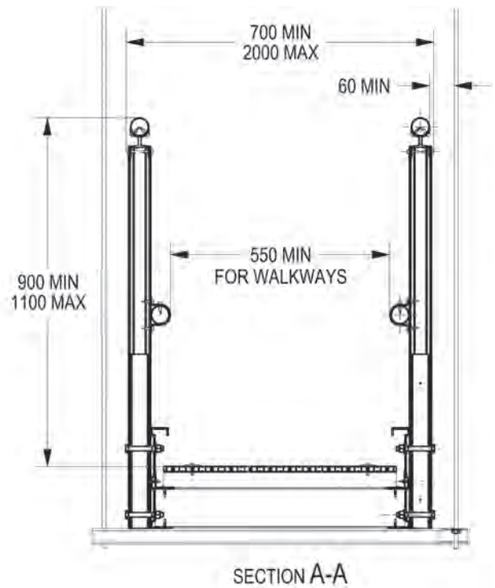

Figure 5.

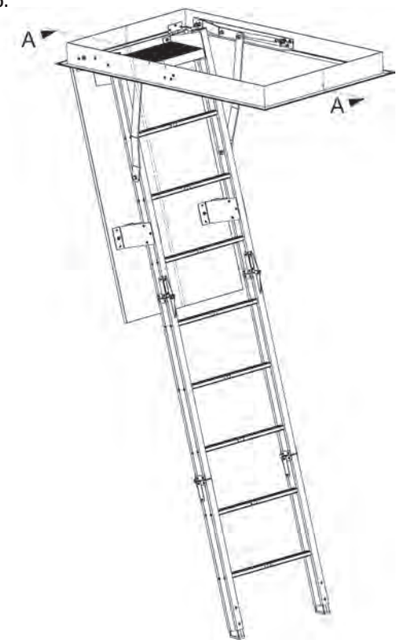

Recommended designer, manufacturer, installer and certifier:

Workplace DEFENDER™
Independently Certified Safety

DEFENDER™

DRAWN:	MGB	30/07/13
CHECKED:	MGB	30/07/13
APPROVED:	–	30/07/13

DO NOT SCALE

TOLERANCES U.N.O.
FABRICATION 0-1000 ± 1.0
>1000 ± 2.0
MACHINING ± 0.2
MACHINE SURFACES 3.2
HOLE POSITION ⌖ Ø 1.0 M
ALL DIMENSIONS IN mm

© Copyright Workplace Access & Safety Pty Ltd. This material is subject to copyright and is provided to you subject to the strict condition that it must not be reproduced or communicated to the public in whole or substantial part without the prior written permission of the copyright owner. If and when such permission is granted, this material may only be reproduced in its entirety, without deletions, omissions, amendments or variations, unless express written permission otherwise has been granted by the copyright owner.

TITLE. DEFENDER™ – INTERNAL & SUSPENDED WALKWAYS

DWG. No. 143-000

–

SHEET 1 OF 3 | SCALE: 1:15 | SIZE A3